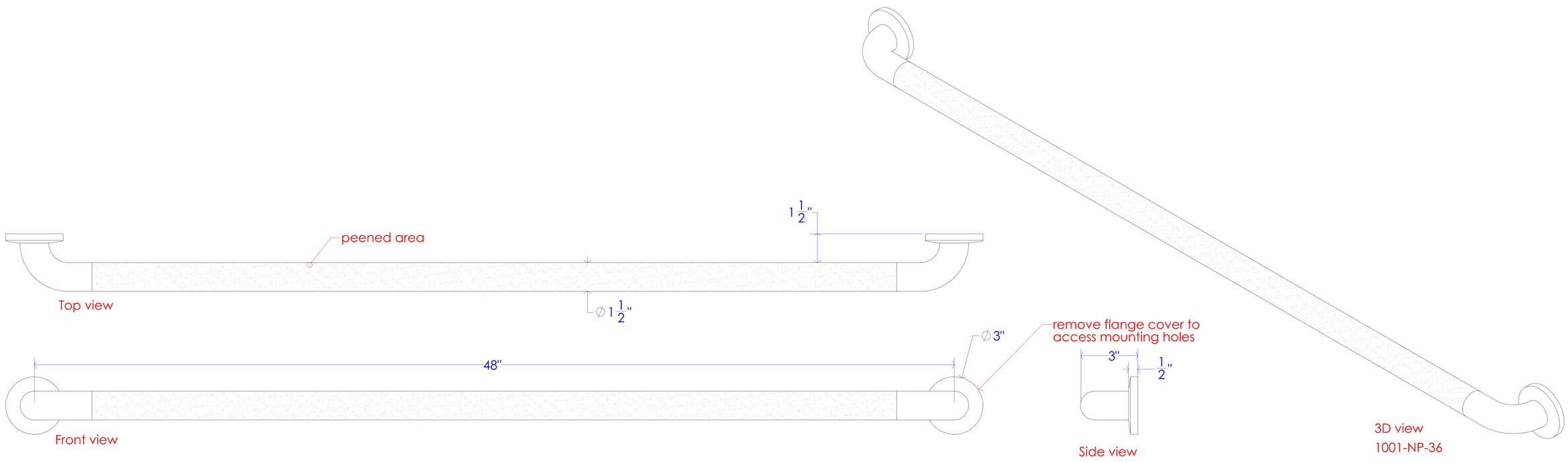

PROPRIETARY AND CONFIDENTIAL
THE INFORMATION CONTAINED IN THIS DRAWING IS THE SOLE PROPERTY OF FROST PRODUCTS LTD. ANY REPRODUCTION IN PART OR AS A WHOLE WITHOUT THE WRITTEN PERMISSION OF FROST PRODUCTS LTD. IS PROHIBITED.

FROST PRODUCTS LTD.
5280 JOHN LUCAS DRIVE, BURLINGTON, ON, L7L 5Z9

DATE: September 22, 2021	TITLE: 1001NP	DWG NO. 1001NP-48 CAD
DO NOT SCALE DRAWING		
UNLESS OTHERWISE SPECIFIED DIMENSIONS ARE IN INCHES.		SCALE: 1:1